

DS 100/T plus black-EN54 Line Array

- Waveguide Technology
- Adjustable steel bracket
- IP66

EN54

CE
26

EN 54-24:2008
Ref. Nr.: 021-09
ID-Code: SAA-LS26
1438-CPR-0983

ic audio GmbH, Boehringerstraße 14a,
68307 Mannheim, Germany

CE-Symbol gemäß Richtlinie 93/68EWG

The DS 100/T plus-EN54 line array combines the strengths of the DS 100/T plus-EN54 into a loudspeaker system that is able to cover even larger areas with excellent speech intelligibility, certified according to EN54-24. The compact line array consists of 4 modules in a steel bracket, each of which can be adjusted in 3 vertical steps of 0, 5, 10 and 15 degrees. This makes it adaptable to all acoustic challenges, indoors and outdoors. The loudspeaker is weatherproof with an IP66 protection rating. A safety rope is included in the delivery.

The attractive design of the impact-resistant ABS housing with an aluminium grille is available in RAL 9005. Each of the 100W speakers is equipped with two 4" performance mid-bass woofers, a 2-way bass reflex system and a high-performance tweeter including a waveguide in D'Appolito arrangement.

A tweeter switch provides a 4dB boost for possible sound correction in near-wall and near-ceiling installations. Each loudspeaker offers 4 different 100V power adjustments, and low-impedance operation is also possible. The connection is made via screw terminals for cable cross-sections up to 4 mm², and the feed line into the enclosure via a PG11 cable gland in the cover plate.

These loudspeakers are also available individually, including a mounting bracket.

Product	DS 100/T plus black-EN54 Line Array
Article No	20238338

Acoustics

Power	4x 100/50 /25 W
Impedance (100V)	4x 100/200 /400/ or 1x4 ohm
Frequency Range	56 - 20.500 Hz (Tweeter 0dB)
Frequency Response	50 - 22.000 Hz (Tweeter 0dB)
SPL 1W/1m, peak	100 dB / 104 dB (Tweeter +4dB)
SPL 1W/4m, peak	88 dB / 92 dB (Tweeter +4dB)
SPL Pmax/4m, peak	114 dB / 116 dB (Tweeter +4dB)
SPL IEC268-5, 1W/1m	97 dB
Sensitivity EN54-24, 1W/1m	92 dB
Sensitivity EN54-24, 1W/4m	80 dB
Dispersion -6dB, 500Hz	182°/62° h/v
Dispersion -6dB, 1KHz	78°/30° h/v
Dispersion -6dB, 2KHz	82°/11° h/v
Dispersion -6dB, 4KHz	175°/10° h/v

Connections and Housing

Connector	Screw terminal
Terminal Diameter	2,3 mm
Maximum Cable Passage	4 mm²
Type A/B	B
Dimensions	0°: 341x852x274 mm / 45°: 341x765x430 mm
Weight (net)	43,0 kg
Housing	ABS
Colour	RAL 9005
Mounting	Mounting bracket
IP Rating	IP66

Certification

Ref. Nr.	021-09
ID-Code	SAA-LS26
Certificate Number	1438-CPR-0983

Product Attributes



Technical Drawing

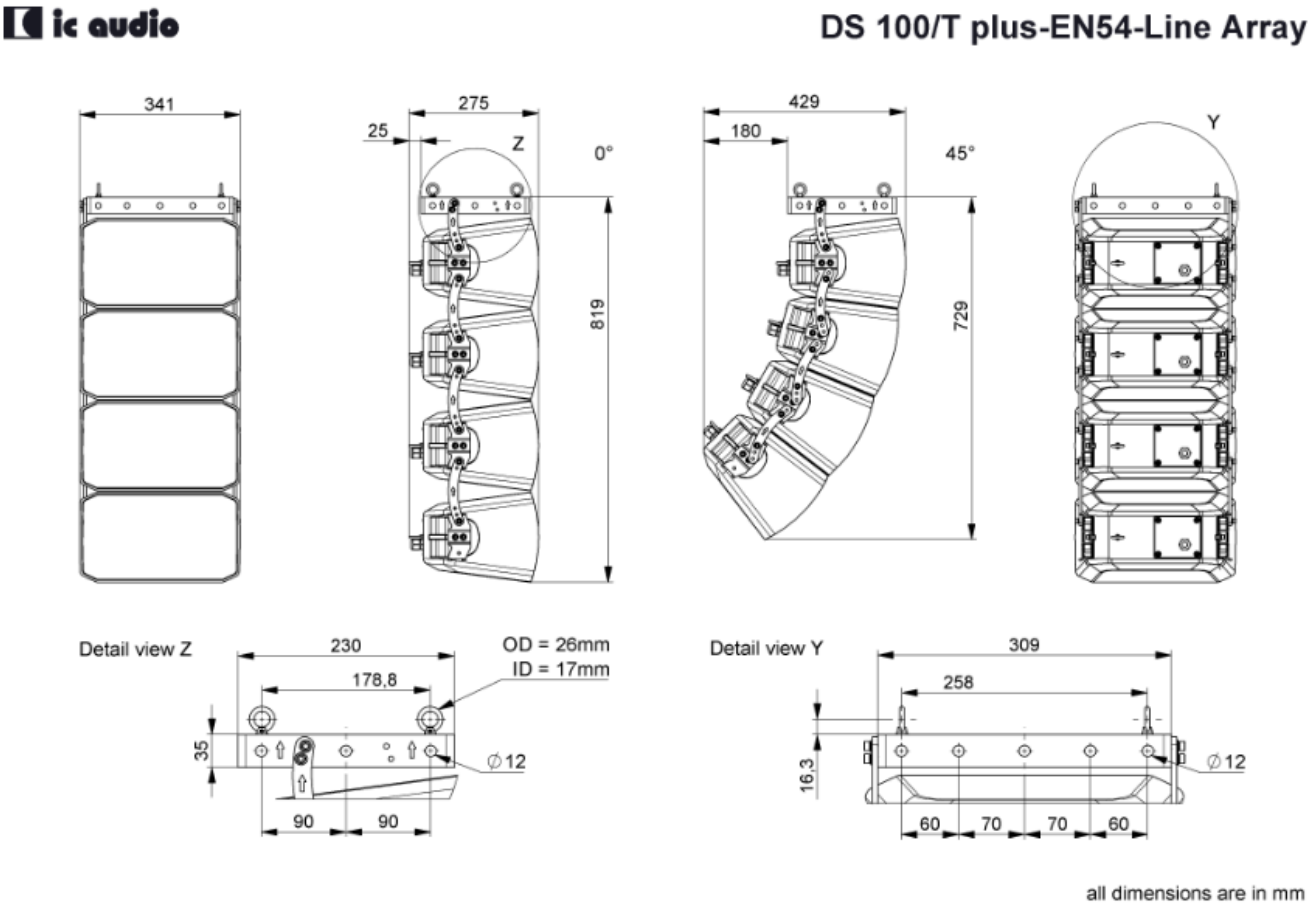

Technical Drawing

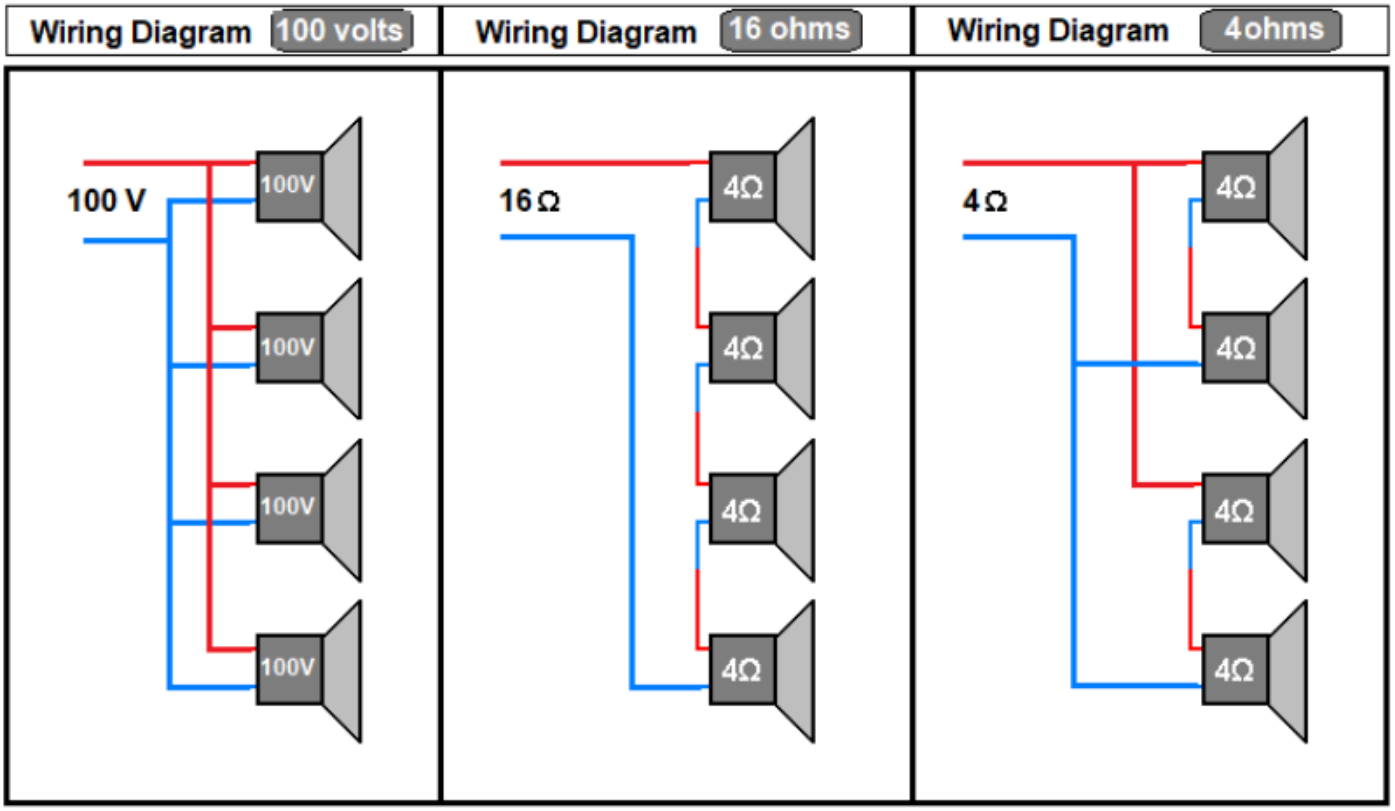

variable	max.	max.
Impedance 25 - 200 Ω	Impedance 16 Ω	Impedance 4 Ω
Amp Power 400 - 50 W	Amp Power 400 W	Amp Power 400 W
Amp Voltage rms 100 V	Amp Voltage rms 80 V	Amp Voltage rms 40 V
Spk.Cable Current 4 A	Spk.Cable Current 5 A	Spk.Cable Current 10 A

Frequency Response Diagram

Sensitivity

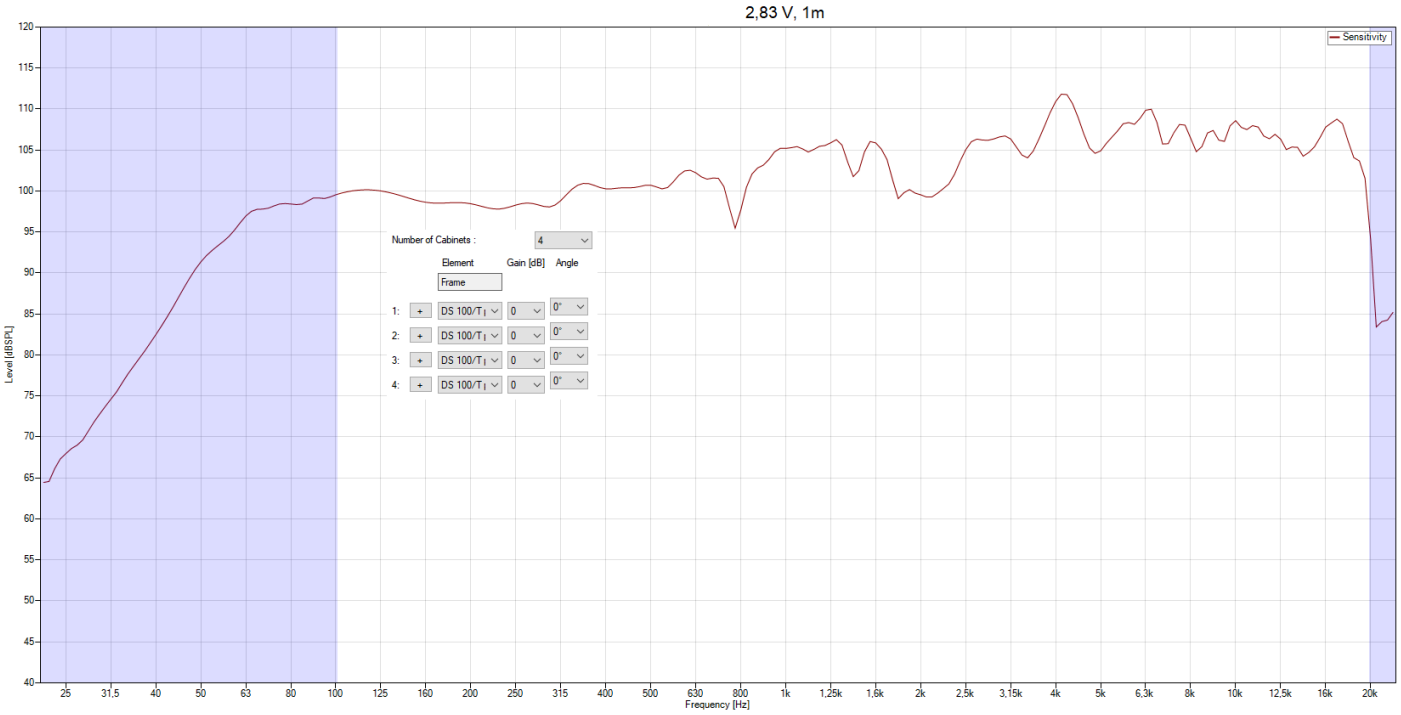

SPL Max

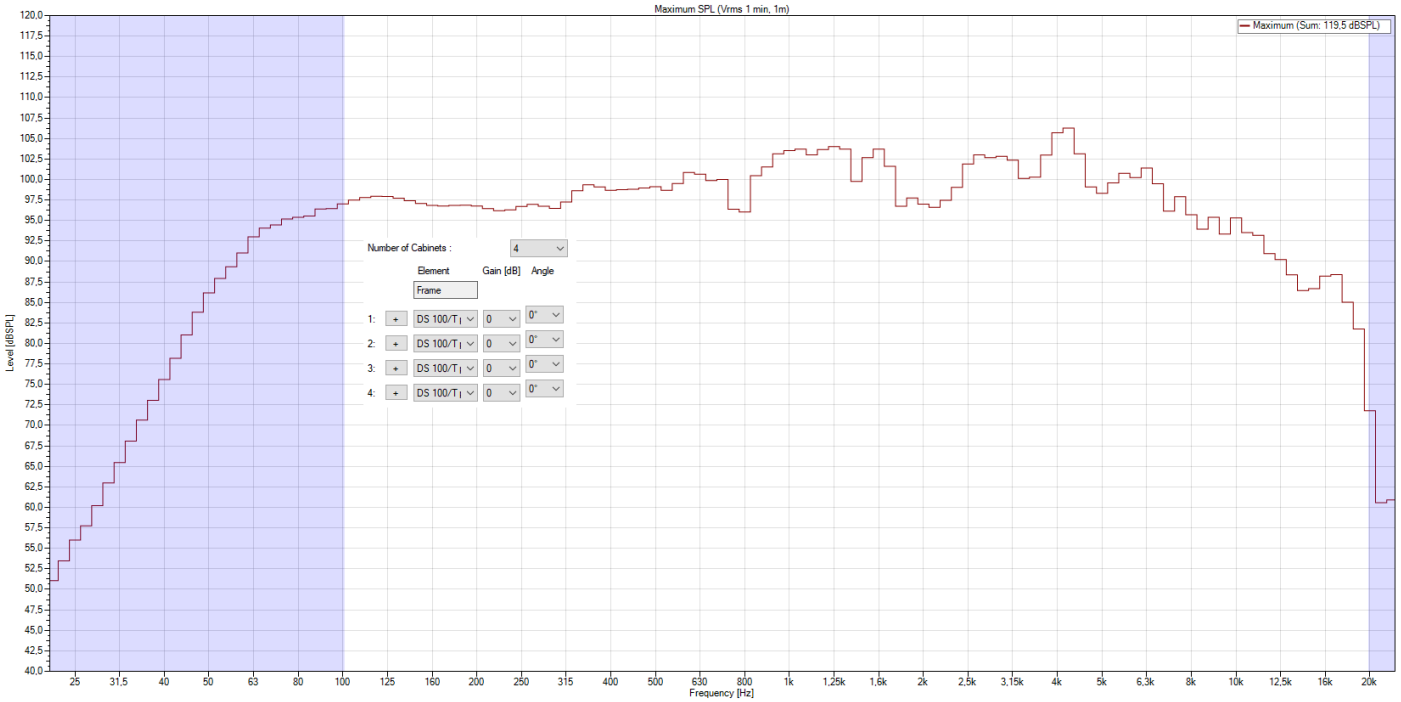

Isobar

Horizontal

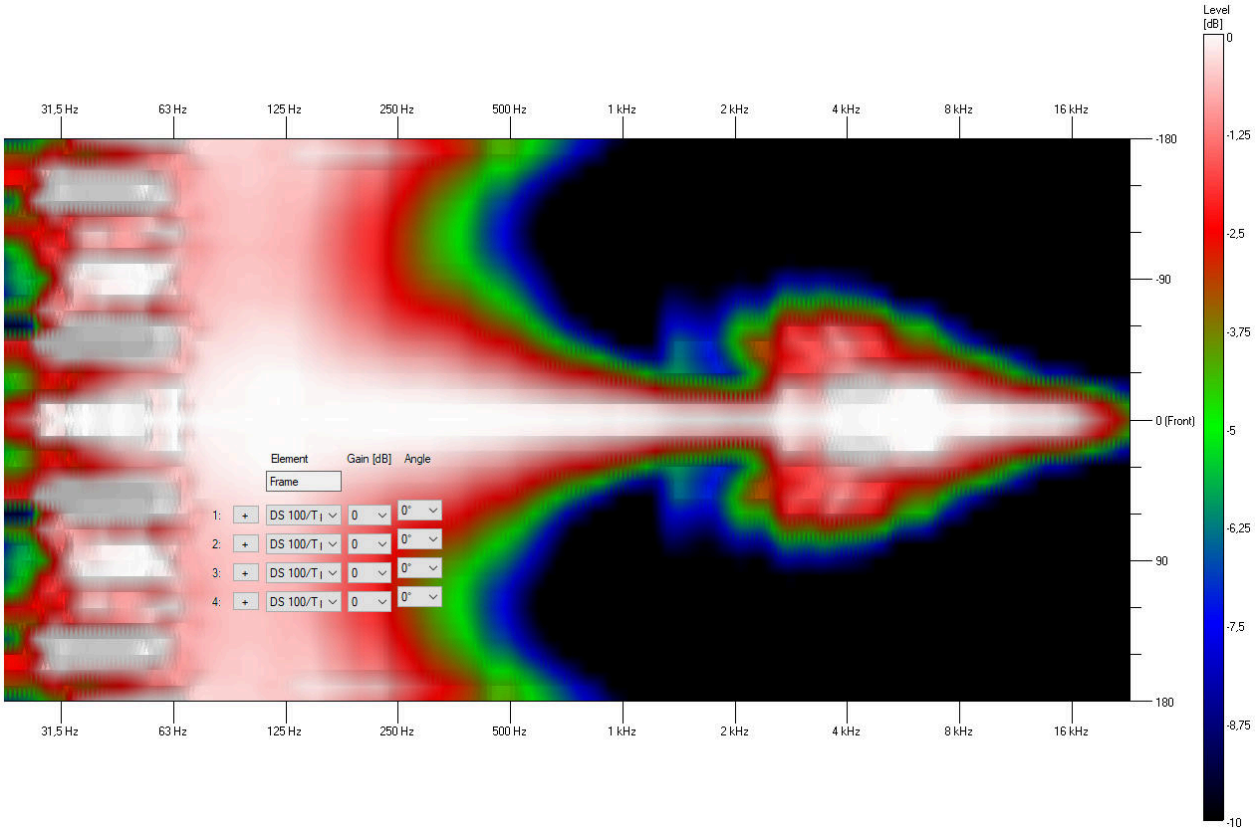

Vertical

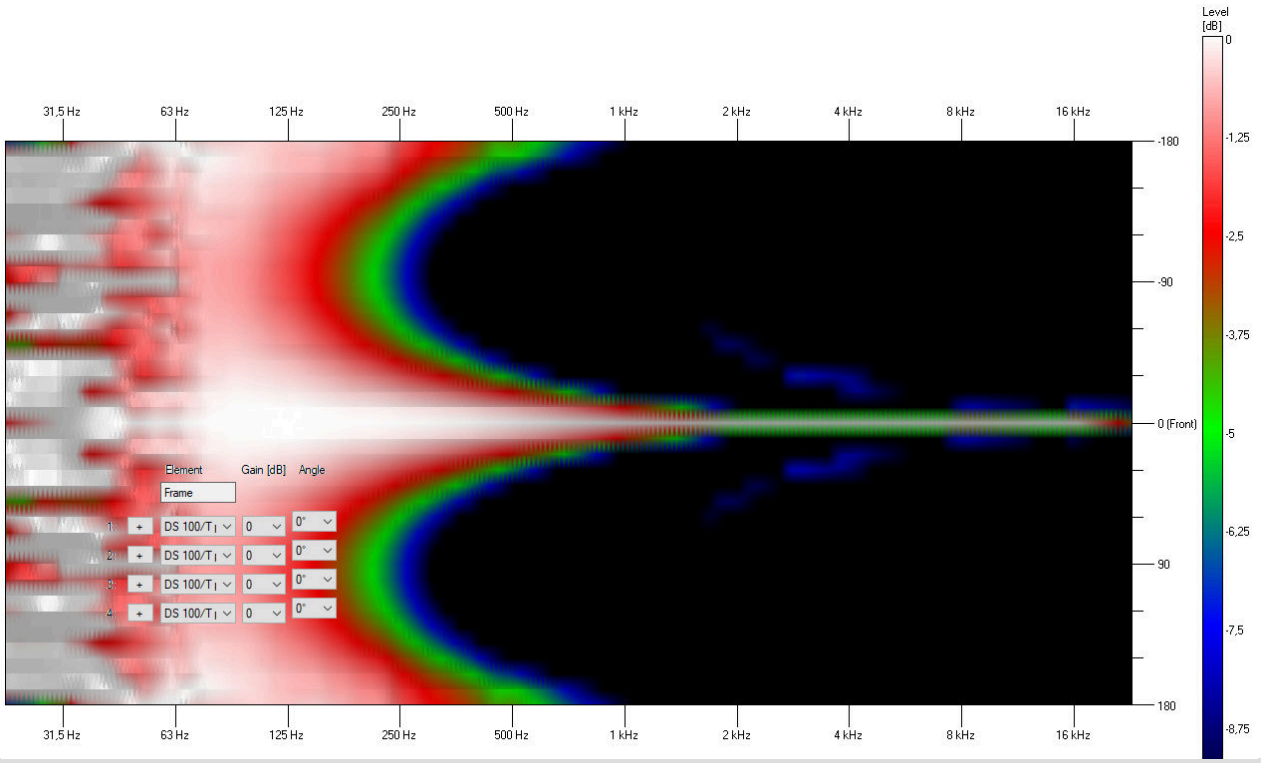

Polar Diagram

Polar Diagram 500Hz

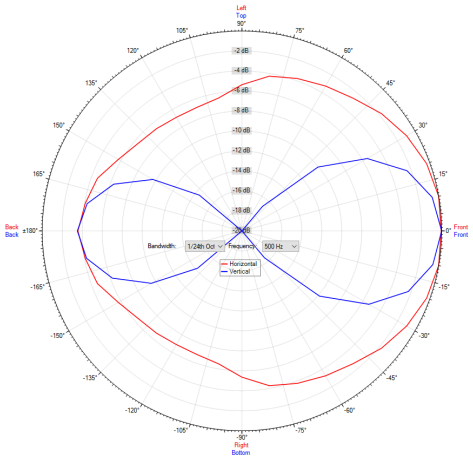

Polar Diagram 4000Hz

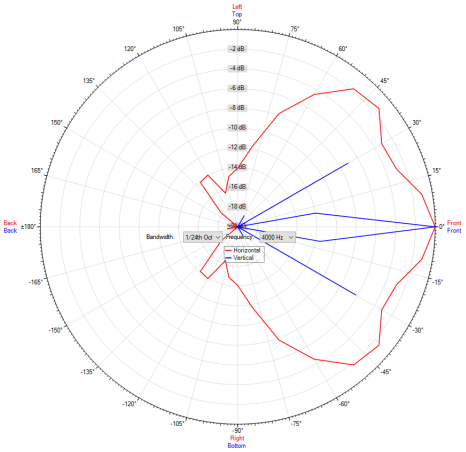

Polar Diagram 1000Hz

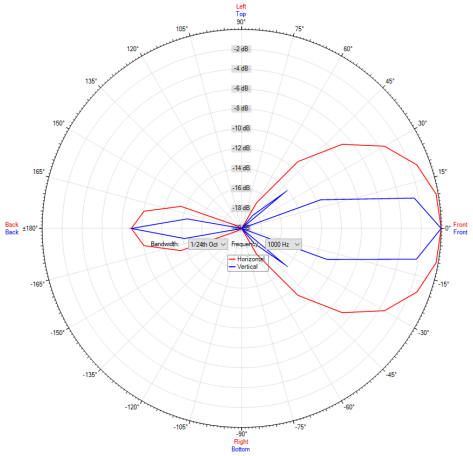

Polar Diagram 8000Hz

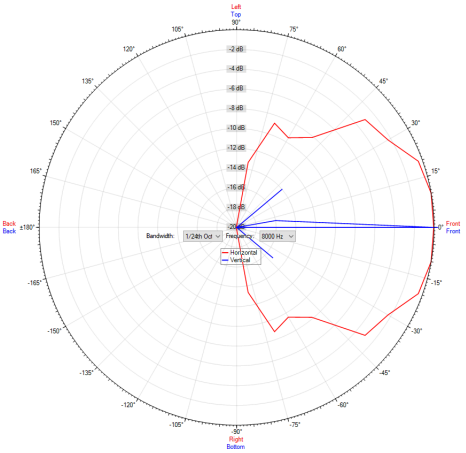

Polar Diagram 2000Hz

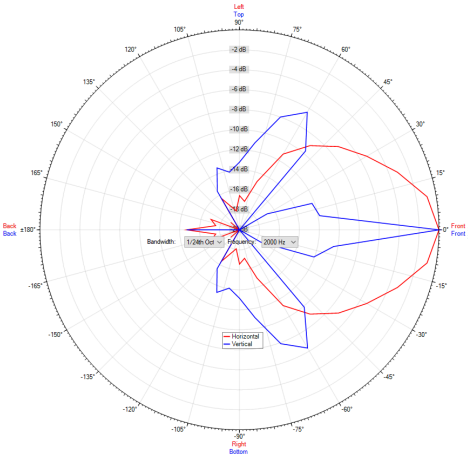

ic audio loudspeakers are tested and classified according to the IEC standard 60529 (degree of protection by enclosure) against the penetration of foreign objects and moisture. The classification is conforming to standards through characterization with a fixed code. This code consists of the letters IP (International Protection) followed by two digits. The first digit indicates the degree of protection against dust and the second digit the degree of protection against water. Please note that the testing of the products has been carried out in laboratory conditions which are not always 100% comparable with the conditions of different installation environments. This protection can be reduced due to normal wear and tear depending on the installation environment.

RoHS compliant (2011/65/EU)

The IP rating specified is based on ic audio test results, not on CNBOP-PIB test results. Certification only verifies the minimum requirements for EN54-24 compliance.

Article No: 20238338
Packing Unit: