WA-AB 06-100/T BLACK-EN54V

Wall speaker for Voice Alarm, A/B-cabling, 2x6W power, certified EN 54-24



Mechanical Data

Colour	RAL 9005
Dimensions	254x195x81 mm
Weight (net)	2,1 kg
Power	2x 6/3/1,5 W
Connector	2-pin ceramic block
Terminal Diameter	3,2 mm
Maximum Cable Passage	8 mm² (single)
Mounting	screws

TO MAKE PEOPLE LISTEN

Copyright ©2026 ic audio GmbH. All rights reserved. Date: 2026-10-30

WA-AB 06-100/T BLACK-EN54V

4 260590 186515

Mounting Instruction

1. Guide the connection cables through the cut-out in the speaker's rear panel.
2. Attach the back panel of the speaker to the wall. Use the enclosed screws.
3. Connect the cable to the 100V transformer.
4. Place the loudspeaker housing on the rear wall. Use the enclosed screws, to fix the speaker to the rear wall.

Please note: To avoid damage, we recommend loosening the cable lug with a flat-blade screwdriver when changing the cable to a different power tapping.

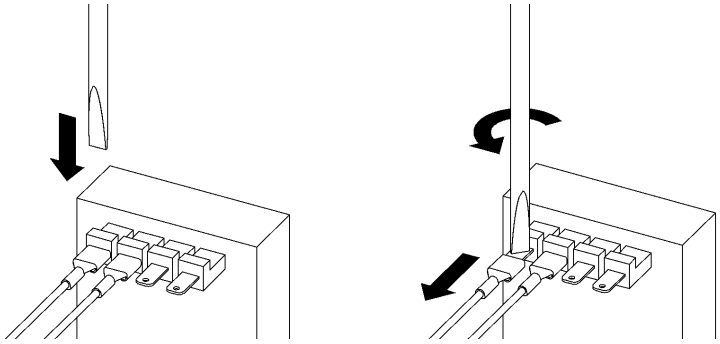

CE
26

CE-Symbol according to 93/68EWG
Measurements according to DIN IEC 268-5
RoHS compliant (2011/65/EU)
CPR compliance according 305/2011/EU

Loudspeaker for voice alarm systems for fire detection and fire alarm systems for buildings
ic audio GmbH, Boehringerstraße 14A
68307 Mannheim, Germany

EN54-24:2008
Ref. Nr.:008-13
ID-Code:SAA-LS08
1438-CPR-0230

TO MAKE PEOPLE LISTEN

Copyright ©2026 ic audio GmbH. All rights reserved. Date: 2026-10-30